LED Jewellery Showcase Light

EAJS08

Features:

- Material: Anodized Aluminium
- Input: DC12V
- Light source: 1pcs 2W LED chip
- Adjustable: Up/down 80°, horizon 350°
- Color: Silver, Black
- CCT: 3000K / 4000K / 6000K

Specification:

Power consumption	Power Input	Day Light Lum@6000K	Flux@1M	CRI
2W	DC12V	140lm	22lx	≥90

If input AC 100-240V, need to add external LED driver(LD38/LD39)

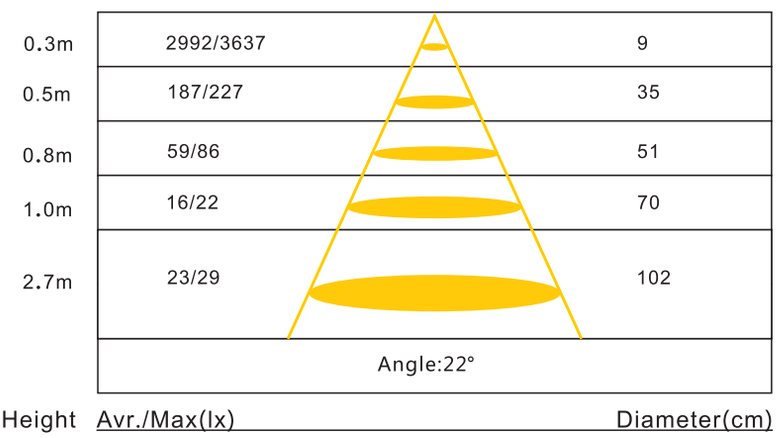

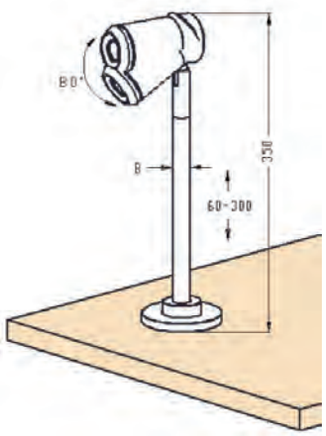

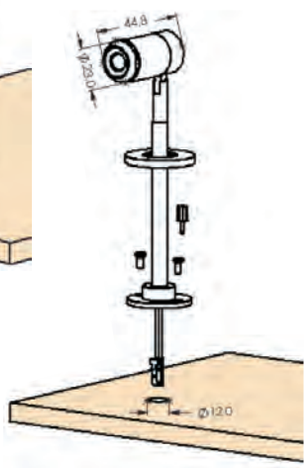

Applications:
Design for cabinet / Showcase / Shop area illumination

Accessory:
LED driver, cable and connector

12V 12VDC 3000K 4000K 6000K